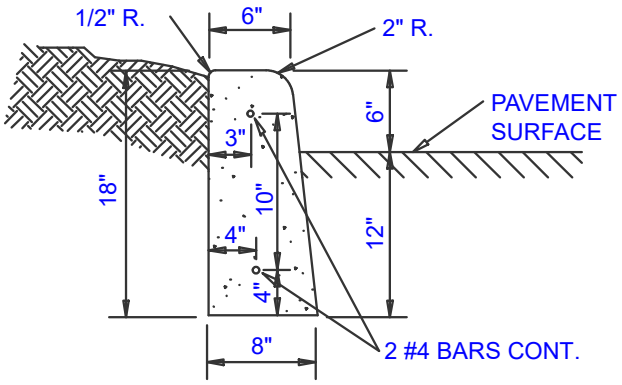

TYPE "C"

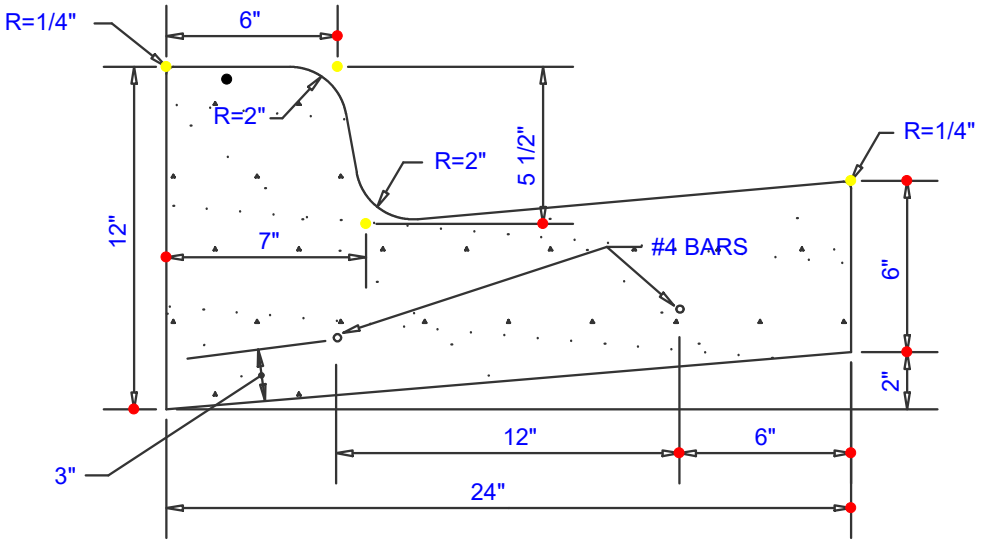

TYPE "B"

NOTE:
1. EXPANSION, CONTRACTION, OR CONSTRUCTION JOINTS ARE TO BE SAME AS NOTED ON TYPE "A" CURB AND GUTTER DETAIL.
2. ALL CURBS MUST BE CAST IN PLACE.

GARDNER, KANSAS PUBLIC WORKS/ ENGINEERING DIVISION	APPROVED	REVISED	PARKING LOT CONC. CURBING	STANDARD DETAIL
	JRH CITY ENGINEER 2-1-07 DATE			21-12