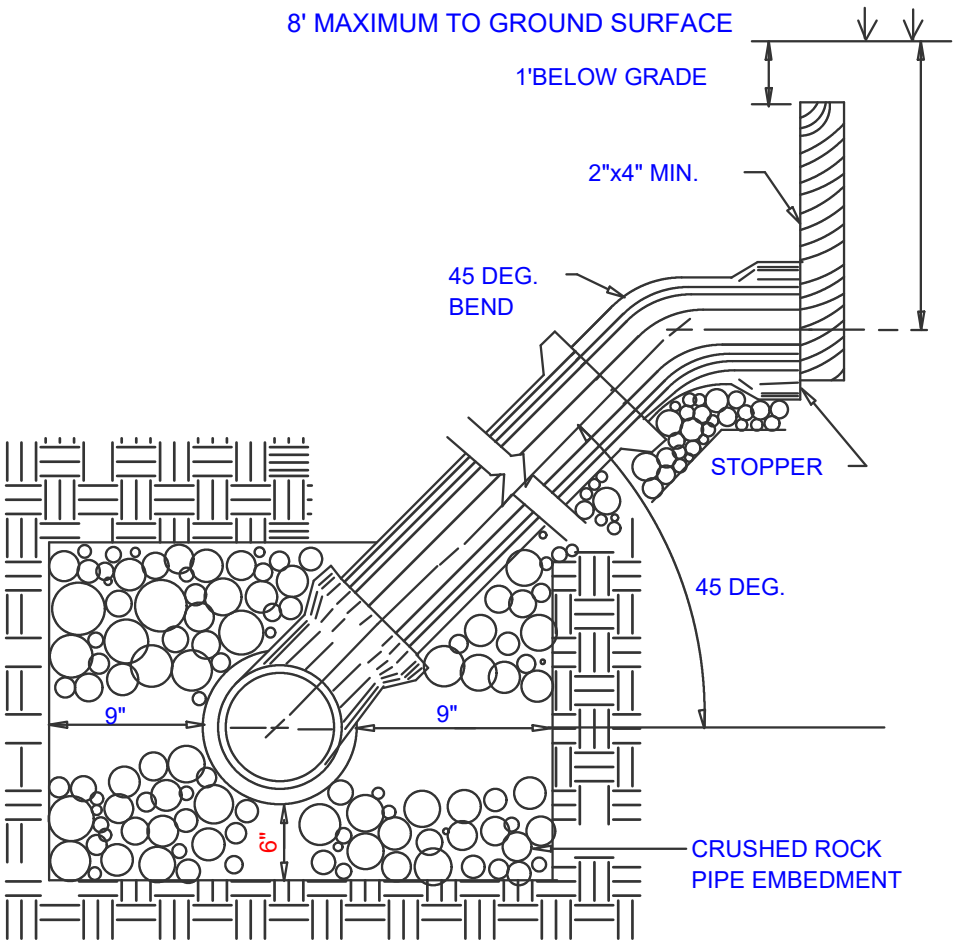

GARDNER, KANSAS PUBLIC WORKS/ ENGINEERING DIVISION	APPROVED JRH CITY ENGINEER 2-1-07 DATE	REVISED	STANDARD DEEP TRENCH SERVICE RISER	STANDARD DETAIL 30-3