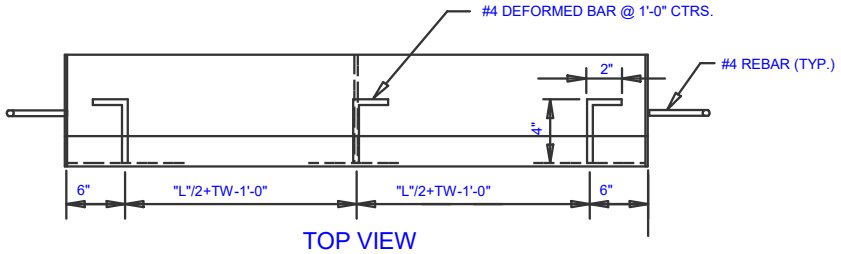

TOP VIEW

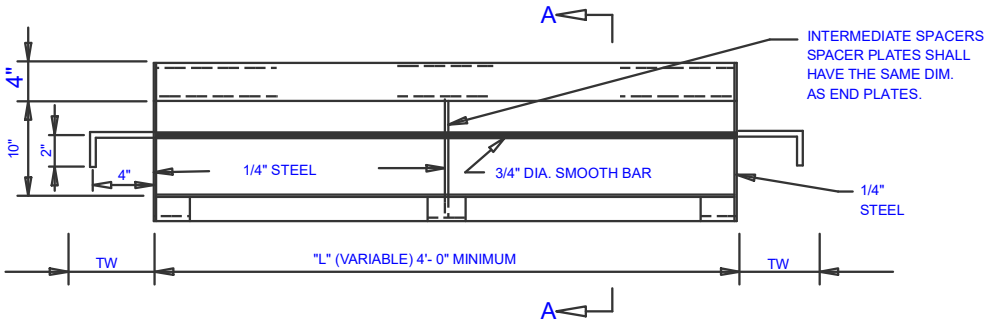

FRONT VIEW

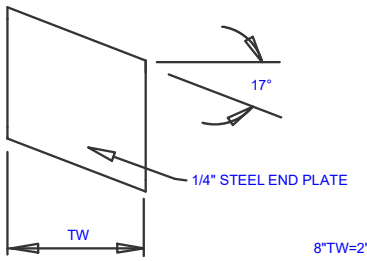

END PLATE

8"TW=2"x2 1/4"x2 1/4"x1/4"
6"TW=2"x1 1/2"x1 1/2"x1/4"

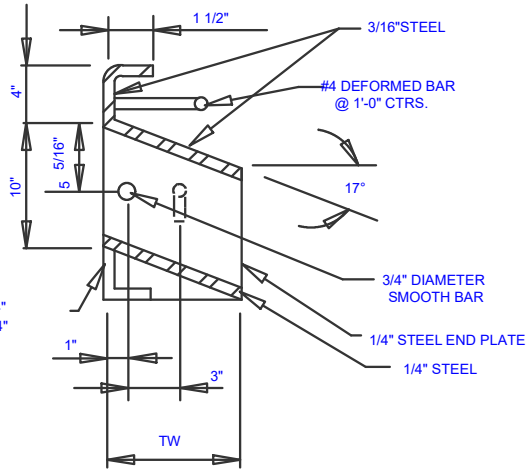

SECTION A-A

NOTE: SEE NOTES STANDARD CURB INLET DETAIL SHEET

GARDNER, KANSAS PUBLIC WORKS/ ENGINEERING DIVISION	APPROVED JRH CITY ENGINEER 2-1-07 DATE	REVISED	STEEL FRAME DETAIL	STANDARD DETAIL 40-3